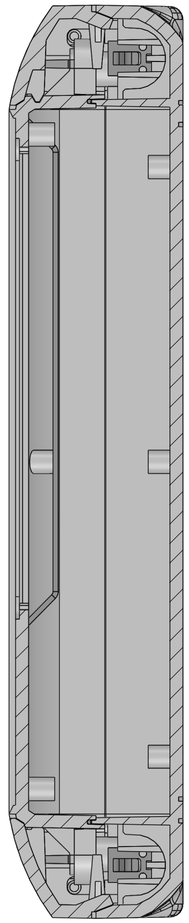

SEZIONE A-A
SCALA 1 : 1

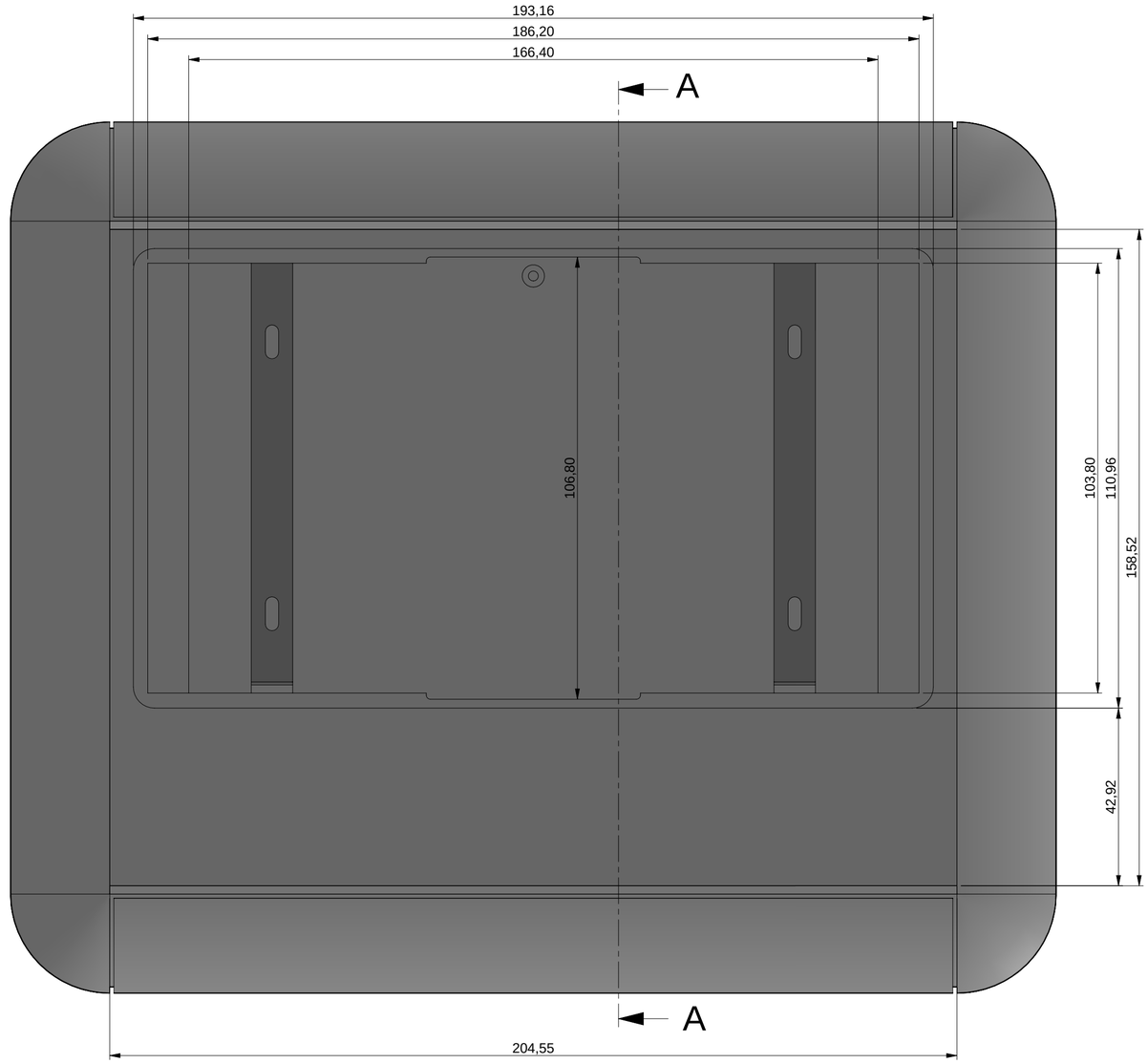

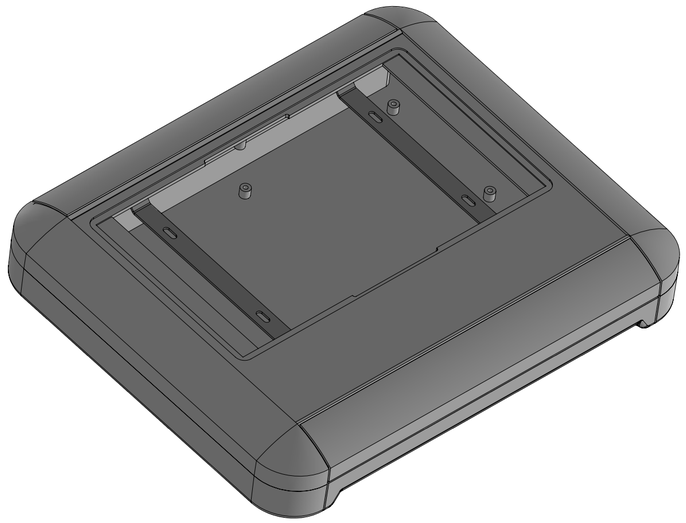

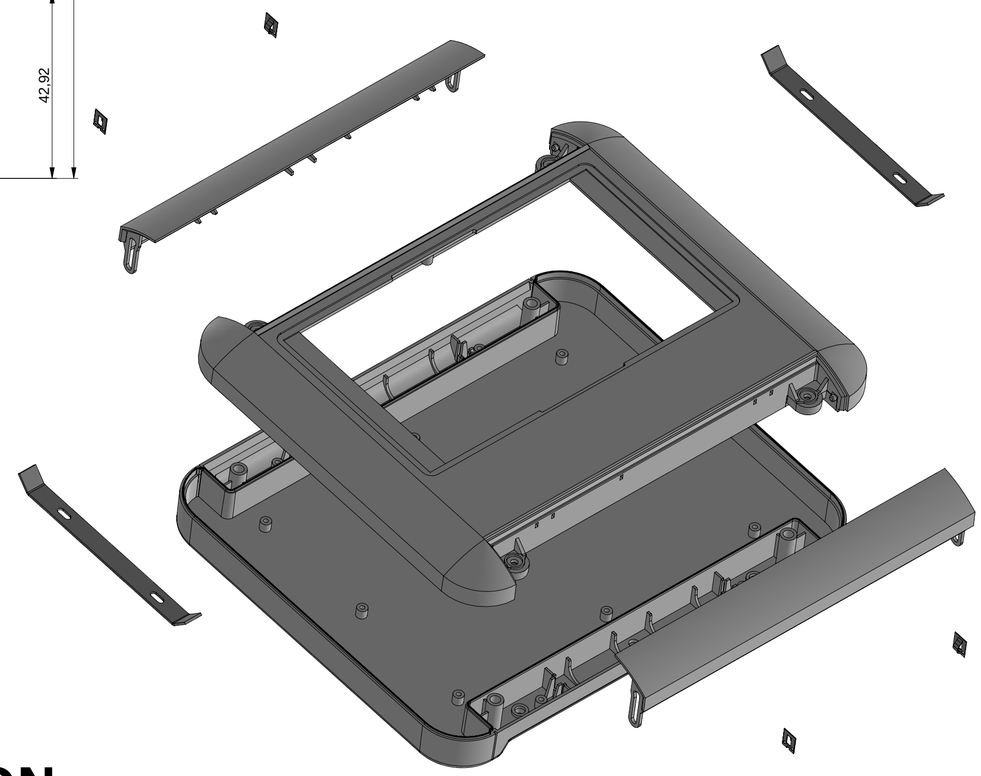

SETTING OF DISPLAY OPENING AND ANY INDIVIDUAL SOLUTION CAN BE PROCESSED ACCORDING TO EXACT CUSTOMERS SPECIFICATIONS

Proprietary and Confidential	**TEKO S.p.A.** Via dell'Industria 5 - S.Lazzaro di Savena - BO - IT			
TEKO ENCLOSURES	***Subject to technical modification without prior notice. Tipographical and others errors do not justify any claim for damages. All dimensions should be verified using an actual moulded part.***			
	Part Number: TW31_DISPLAY	*Date:* 26/05/2016	*Sheet:* **1 of 1**	*First angle prj.*
*This document contains proprietary information of **TEKO S.p.a.** and is tendered subject to the conditions that the information be retained in confidence not be reproducer or copied and not be used or incorporated in any product*			*Size:* **A2**	*Scale:* **1:1**